Electric
Water Distillers
PE-2205, PE-2210, PE-2220

Data Sheet
Operating Manual

Version 1.0en dated 07.02.2017

Part numbers:

1.100.0010
1.100.0020
1.100.0030

Saint Petersburg
2017

Table of Contents

1. General Instructions

1.1. The present Data Sheet combined with the Operating Manual describes the characteristics and procedure of work with the electric water distillers of PE-22x0 series (hereinafter referred to as the distiller).

1.2. Prior to operation of the dry block heater, read carefully the sections “Technical Specification”, “Working Procedure” и “Safety Requirements”.

1.3. Due to continuous improvement of the products the construction of the product can be subjected to modifications not worsening its characteristics, which are not reflected in the Data Sheet.

2. Purpose

2.1. The series product takes tap water as source water; water vapor is produced by electric heating and the distilled water is produced by condensation. The product is featured by reasonable structure, simple operation, convenient use, good safety and reliability, large water yield, stable water quality and good durability. The quality of the distilled water produced by the series product meets the state standards; and the product is the ideal choice for such departments as medical health, pharmaceutical, electroplating, food, chemical and laboratory to produce distilled water.

3. Technical Specification

3.1. Main parts material..... stainless steel.

3.2. Main technical parameters are given in Table 1.

Table 1

Model	PE-2205	PE-2210	PE-2220
Water yield, l/h	≥ 5	≥ 10	≥ 20
Total water discharge, l/h	≤ 45	≤ 75	≤ 145
Supply voltage, V	240	416	416
Power consumption, kW	4,5	7,5	15
Overall dimensions, mm	240x300x720	280×310×830	360×390×1010
Weight, kg	6	7,5	11

4. Operating conditions

4.1. Ambient air temperature, °C..... +10 to +35

4.2. Relative air humidity, % ..... up to 80

4.3. Power supply frequency, Hz.....48÷62

4.4. Allowable time of continuous work, hours.....8

5. Scope of delivery

5.1. Water distiller..... 1 pc.
5.2. Plug for power connection..... 1 pc.
5.3. Operational manual ..... 1 pc.

6. Device

The product is mainly composed of evaporation cask, condenser and electric control device.

Figure 1 – Water distiller

Main parts: 1 – evaporation cask; 2 – evaporation cask cover; 3 – condenser; 4 – water source valve; 5 – water return pipe; 6 – water supplement tank; 7 – distilled water outlet pipe; 8 – water drain pipe; 9 – water drain valve.

6.1. Evaporation cask

This part, which is made of high-quality stainless steel sheet, is elaborately produced by making use of advanced technology (rolling, stretching, welding, etc.); seal ring is applied between the cask body and cover, which improve the sealing performance. Water retaining cap is set in the cask cover to effectively prevent water drop being carried in vapor (which will affect the quality of the distilled water). The water will automatically overflow from the overflow pipe when the water in the cask exceeds the limiting water level. Buckle connection is adopted for the cask body and cover, which is convenient for disassembly and removal of scale deposit in the cask.

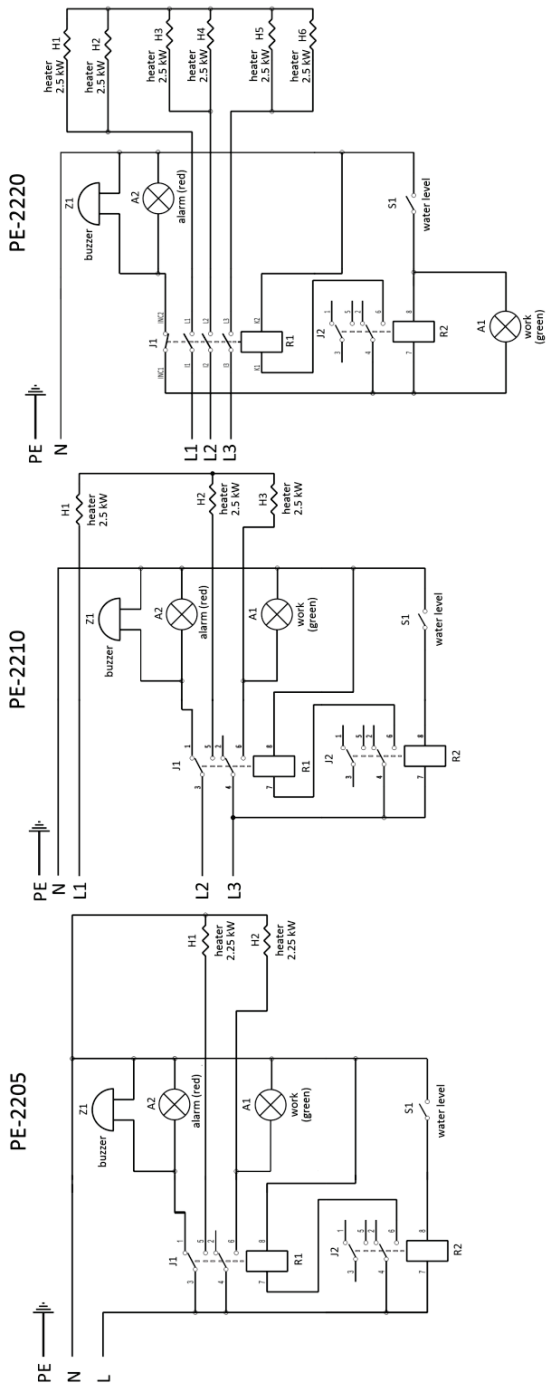

Figure 2 – Schematic circuit diagrams

6.2. Condenser

The outside of this part is made of high-quality stainless steel sheet; and the inside is made of high-quality seamless stainless steel tube. It is demountable; the heat exchange efficiency is high and it is convenient for cleaning.

6.3. Electric control device

This device mainly comprises contactor, relay and liquid level switch, etc. In case of break of cooling water source, the heating of water in the evaporation cask will be continued; vapor will be ejected from the distilled water outlet and there is no output of distilled water; some time later, the water in the evaporation cask will be evaporated. When there is an acute lack of water in the evaporation cask, the device can automatically cut off the heat output for stopping heating; meanwhile, sound and light alarm will be sent. After the cooling water flows back to the cask and the working water level is reached, the device can automatically perform connection and heat, and continue produce high-quality distilled water.

Schematic circuit diagrams of distillers are given in the Figure 2.

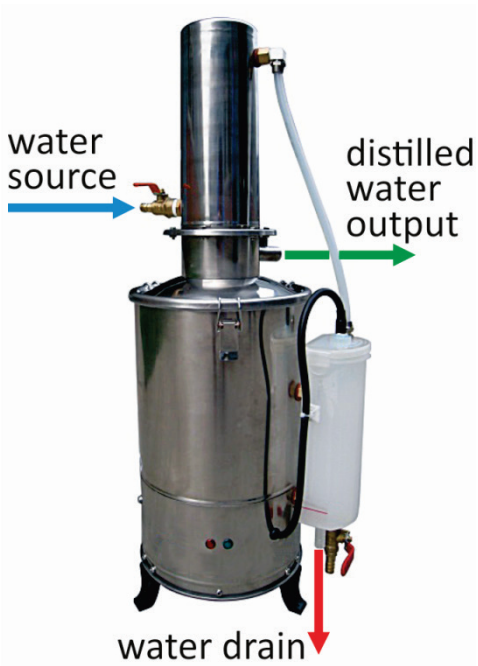

Figure 3 – Pipes connection diagram

7. Installation

7.1. Connect the water source and water pipes as per Figure 3.

7.2. Make the equipment cable connected to your distribution board; the voltage shall be consistent; the equipment shall be grounded completely; and leakage protector must be used for the equipment switch.

7.3. Water drain valve shall be closed before normal use of the equipment.

7.4. Notes for installation:

7.4.1. The power supply voltage must be normal and within the specified range, it shall not exceed ±10%.

7.4.2. There must be the domestic water source with stable flow, and the water pressure shall be no lower than 0.1MPa. Prevent the water consumption around from affecting the water supply, which may cause reduction or interruption of distilled water production.

7.4.3. The distilled water outlet pipe shall not be too long, it shall be able to be inserted into the port of distilled water container, and it shall be kept unblocked. Before being used, the pipe shall be cleaned and washed with

8. Working Procedure

8.1. Open the cooling water valve to feed water to the equipment (low water pressure shall be maintained); regulate the cooling water pressure after the water pipe at the overflow outlet starts to have overflow phenomenon; the overflow water level shall be within the liquid level range specified by the red warning label and it shall be kept stable.

8.2. Then, connect the power supply device for working. During the water production process by heating of the instrument, observe whether the overflow water level is within the specified range; if not, regulate the cooling water pressure to stabilize the overflow water level; 30 minutes pre-distillation shall be performed before the distilled water is formally taken each time.

8.3. After the water in the pot boils, the inlet water control valve or water source valve may be adjusted to regulate the cooling water inflow; and in the meantime, please observe the distilled water yield.

8.4. When there is an acute lack of water in the evaporation cask (ordinary type does not have this function), the device can automatically cut off the heating power supply for stopping heating; meanwhile, sound and light alarm will be sent.

8.5. Note:

8.5.1. The surface temperature is very high during the equipment operation process, so please do not touch the equipment surface, so as to prevent

scald. After use, the power supply of the equipment must be cut off, and clean the equipment after the temperature decreases.

9. Operating maintenance

9.1. The inside shall be washed before the product is used each time, so as to prevent the produced scale deposit from affecting the water quality and use effect.

9.2. Scale deposit may appear on the surface of evaporation cask and electrical heated tube, inner wall of condenser pipe, outer wall of condenser, inner wall of water return pipe, etc. The method of eliminating it: use hairbrush to brush it; and then use weak acid or weak base solution for cleaning based on the actual conditions. Be careful not to overexert when washing, so as to prevent damage of parts.

9.3. The electrical heated tube must be fully immersed into water for use.

9.4. The electric control device shall be inspected on a regular basis.

9.5. When cleaning and using the product, please do not make water directly sprayed into the controller, so as to guarantee safety.

9.6. If user needs to replace the electrical heated tube due to repair, the washer at the joint position must be in good condition, so as to guarantee that there is no water leakage.

9.7. The newly purchased water distiller shall be cleaned, and more than two hours power on for distillation shall be performed for self-cleaning of inside. Then, it may be formally put into use, so as to guarantee that the water quality meets the requirements.

10.Safety Requirements

Prior to connecting the device to the power mains, make sure that the power cord and other components are free of mechanical damages.

As regards the method of protection of a human against electric shock, the distiller corresponds to class I to GOST 12.2.007.0 standard.

When operating the distiller, the “Rules for Operation of Customers' Electrical Installations” and “Safety Rules for Operation of Customers' Electrical Installations” approved by the State Power Supply Inspectorate (Gosenergonadzor) shall be observed and the requirements of GOST 12.2.007.0 standard shall be met.

The persons allowed to operate the distiller shall have necessary qualification and be trained in the safety regulation as well as shall have studied the present Operating Manual.

11.Storage and Transportation Rules

Within the guaranteed storage life, the instrument shall be stored in the manufacturer's package at a temperature of +5 to +40°C and relative humidity of 80%. The unpacked instrument should be stored at ambient air temperature of +10 to +35°C and relative humidity of 80%.
The distiller may be transported by any transportation mode in roofed vehicles within the temperature range of -40 to +50°C and relative humidity of not more than 95%.

12.Warranty

The manufacturer guarantees the operability of the instrument provided the transportation, storage and operation conditions are met.
The warranty period is 1 year from the date of sale of the product as determined by the date of the bill of lading. Within this period, the supplier undertakes to repair the defective parts or replace them with new ones free of charge.
The warranty rights of the consumer are recognized within the specified period provided the consumer meets all the requirements for transportation, storage and operation of the product.
Should any faults of the distiller be detected, the report with indication of the faults and contact telephones of the user should be drawn up. This report shall be sent to the manufacturer's address:

Ecohim Co. Ltd.
22 17th Line, building I, Suite 406, Vasilyevsky Island, Saint Petersburg, Russia, 199178.
Phone: (812) 448-76-10, fax: (812) 448-76-00
E-mail: info@ecohim.ru
URL: www.ecohim.ru

13.Certificate of Acceptance

Water Distiller **PE-22__0** serial No. **2K2___P**_____ has been verified for compliance with the requirements of the technical documentation and recognized to be suitable for operation.

Date of manufacture _____

LS

Inspector _____